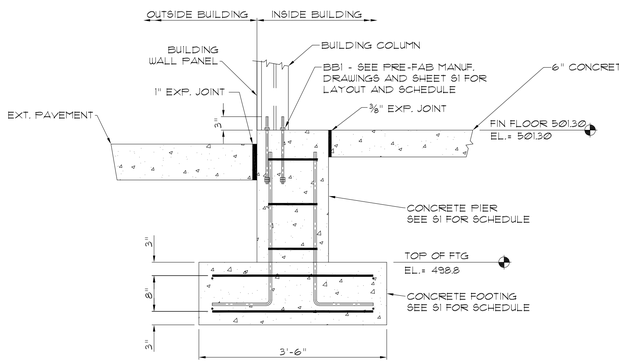

A S1 SECTION A-A
SCALE: 3/4"=1'-0"

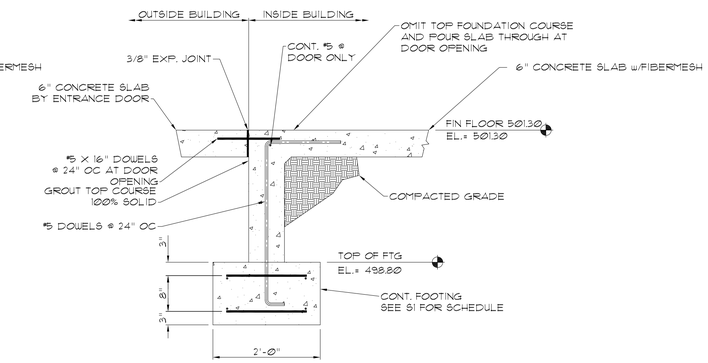

B S1 SECTION B-B
SCALE: 3/4"=1'-0"

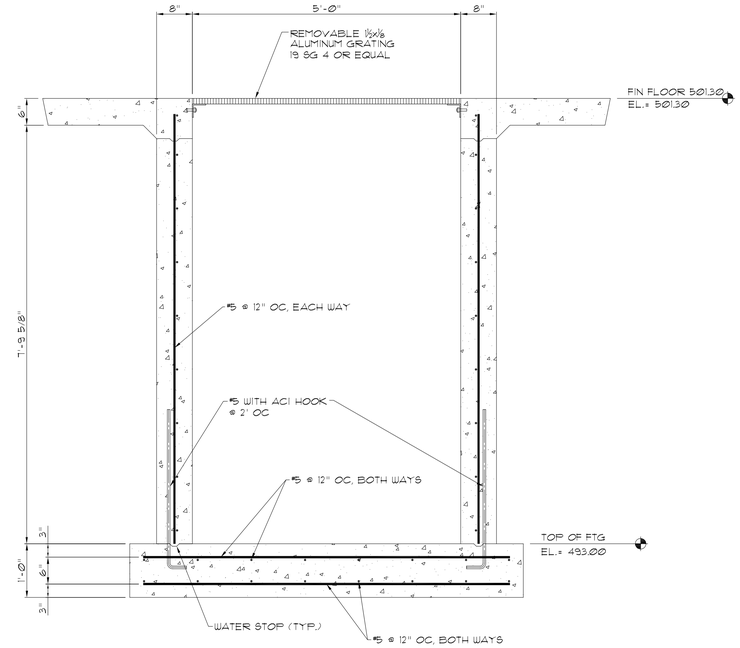

E S1 SECTION E-E
SCALE: 3/4"=1'-0"

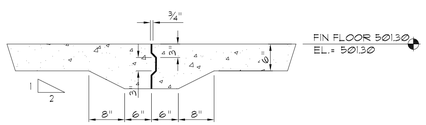

USE AT POUR STOPS ONLY

B S1 TYP. CONSTR. JT.
SCALE: 3/4"=1'-0"

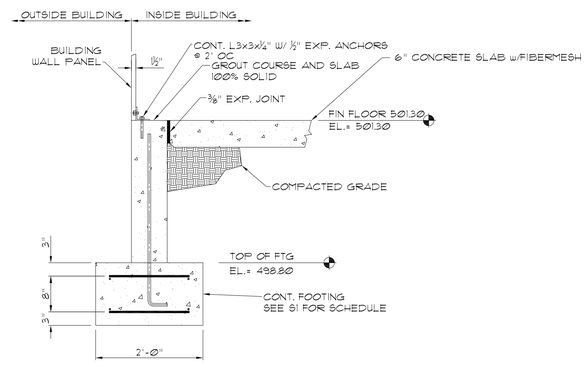

D S1 SECTION D-D
SCALE: 3/4"=1'-0"

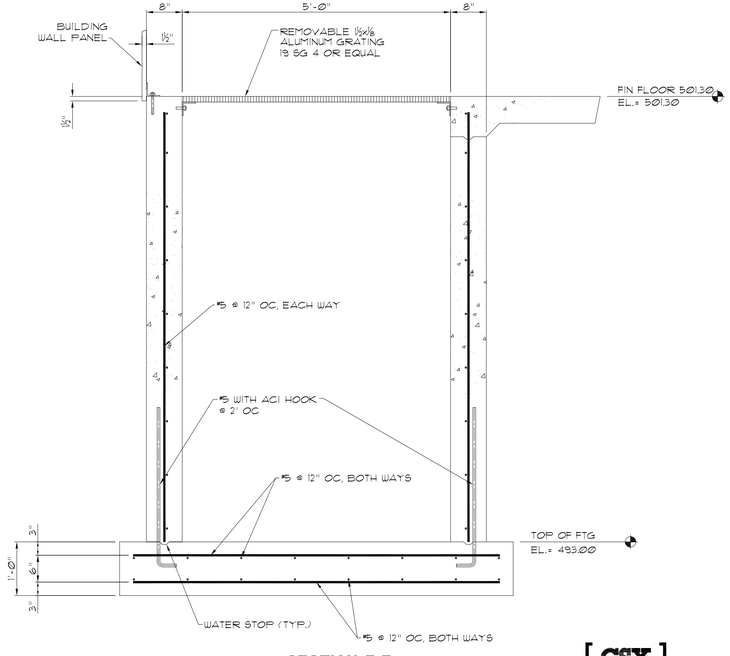

F S1 SECTION F-F
SCALE: 3/4"=1'-0"

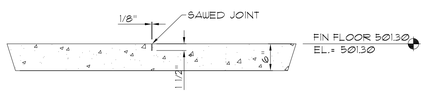

LOCATE CONTROL JOINT AT COLUMN CENTERLINES AND AT INTERMEDIATE LOCATIONS AS REQUIRED TO MAINTAIN MAXIMUM SPACING OF 9'-0" OC IN EACH DIRECTION.

TYP. CONTROL JT.
SCALE: 3/4"=1'-0"

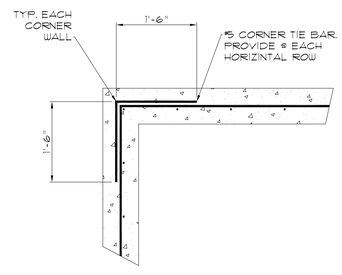

F S1 DETAIL F
SCALE: 3/4"=1'-0"

LAST REVISION: 01/04/12
LAST PLOTTED: 01/04/12
DRAWING SCALE: 3/4"=1'
PLOT SCALE: 1=1

CSX INTERMODAL TERMINALS, INC.
TERMINAL DEVELOPMENT GROUP
JACKSONVILLE, FLORIDA

STATE OF OHIO
ALFONZ ANDREANSKY
E-75847
REGISTERED
PROFESSIONAL ENGINEER

AS-BUILT DRAWINGS
I hereby certify that these "As-Built Drawings" reflect all significant changes and deletions approved during construction and that these "As-Built Drawings" and prints, drawings and other information furnished to the Engineer by the Contractor are accurate and complete to the best of my knowledge and belief.
ENGINEER: DATE: 1/4/12

DRAWING CONFIDENTIAL:
THIS DRAWING AND ALL INFORMATION CONTAINED THEREON IS AND SHALL REMAIN THE PROPERTY OF A. ANDREANSKY, P.E. AS AN INSTRUMENT OF PROFESSIONAL SERVICE. THIS INFORMATION SHALL NOT BE USED WITHOUT THE FULL KNOWLEDGE AND PRIOR WRITTEN CONSENT OF AL ANDREANSKY, P.E.

SCALE VERIFICATION
THIS BAR REPRESENTS ONE INCH ON THE ORIGINAL DRAWING
0 1"
USE TO VERIFY FIGURE

REVISION	DATE	DESCRIPTION	BY	APPROVED
1	5/12/11	ADD SECTION F-F	A.A.	
2	9/14/11	BLDG ARR REVISIONS	A.A.	
3	12/29/11	AS BUILT REVISIONS	A.A.	

ENGINEER OF RECORD:
AL ANDREANSKY, P.E.
OHIO REG. #75847
DATE SIGNED:

CAD FILE: 11022401S	SCALE: 3/4"=1'
DRAWN BY: A.A.	DATE: 04-08-11
CHECKED BY:	DATE:
APPROVED BY:	DATE:

AL ANDREANSKY, P.E.
P.O. BOX 456
PALM HARBOR, FLORIDA 34682-0456
PHONE: (727) 460-8612, FAX: (727) 789-9565

BUILDING FOUNDATION DETAILS

2149 WESTERN AVENUE
CINCINNATI, OHIO 45214

PROJECT No. 11022401.001

SHEET S2 of 2

CINCINNATI TERMINAL, CSX INTERMODAL, JACKSONVILLE, FLORIDA